Wiring Diagram

Heavy Duty Wiring Harness

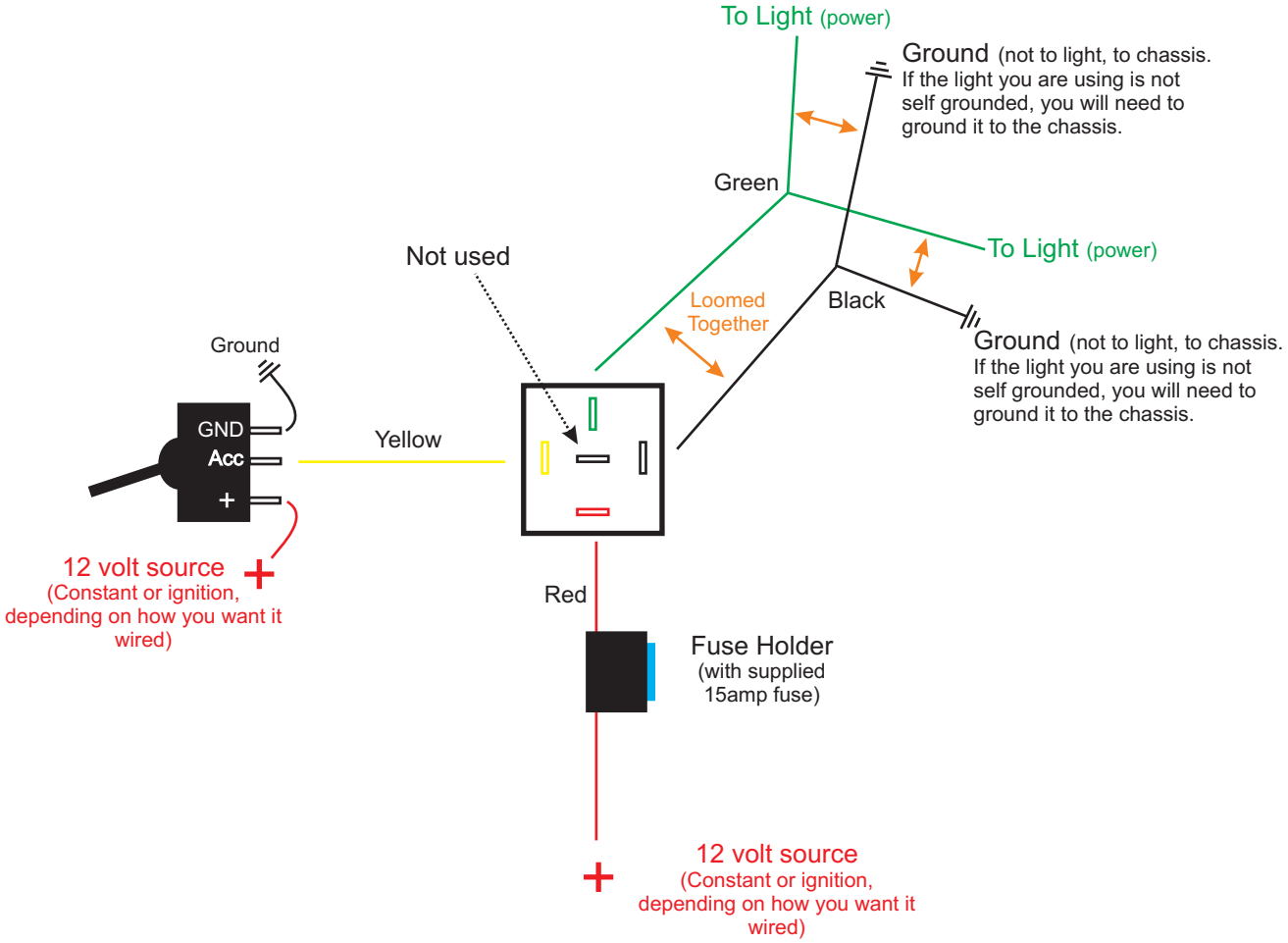

Rampage Products Buford, GA
Phone: 800-328-2409
www.rampageproducts.com
Made in China